Walk-In Cooler Evaporator EC Fan Motors

Made In America

MARS American Iron Motors are high efficiency designs that are made in America incorporating EM&S patented, permanent magnet ECM technology that brings outstanding energy savings.

Features:

- 3.3 Interchangeability
- Shaft down and horizontal mounting
- Cast iron unit bearing construction
- Front mount studs
- Rotation: shaft end

Specifications:

- Universal, fits most 1/15HP and smaller applications,1550 RPM
- 230 Volt 60/50 Hz; 115 Volt 60 Hz.
- 22.5" Leads with EMF/ Lyall Plug
- 4 10-32 Hex Flange nuts are supplied with each motor
- UL and cUL recognized

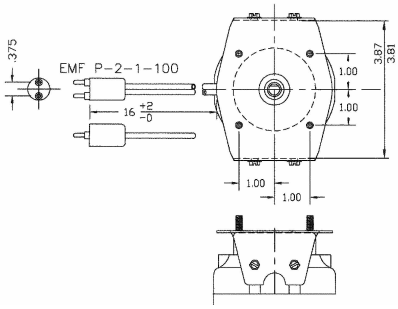

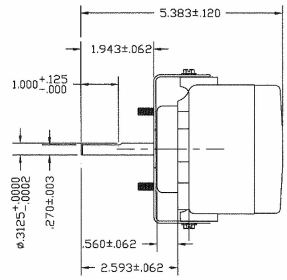

SEE THIS MOTOR IN ACTION!
Scan for video

1550 RPM – Single Speed

MARS NO.	APPLICATIONS	HP	VOLTS	AMPS	ROT SE	RPM	MARS PACK
00221*	Evaporator/Condenser	1/15	230	0.77	CW	1550	1

* Shaft and leads are on the same end

Evaporator/Condenser

Made In America

The Unitronix Double Duty is an electronically commutated motor that brings outstanding energy savings to the refrigeration market in the form of a direct drop-in replacement for practically all unit bearing motors. No additional labor or sheet metal work is required to replace an existing shaded pole unit bearing motor with a Unitronix Double Duty.

Heat in a refrigerated space has always been a necessary evil in the food marketing industry. Lights, motors and defrost heating elements are the culprits. But, heat shortens food storage life and adds to the load placed on the refrigeration system. The new Unitronix Double Duty dramatically reduces (by as much as 75%) the waste heat generated by refrigerated case evaporator motors.

The universal 5 rear mounting hole configuration and the double boss with 4 drilled and tapped mounting holes on each boss mean no additional labor or sheet metal work!

Features:

- Special wide temperature range lubrication system
- High capacity oil reservoir spiral grooved shaft for efficient distribution of oil to the bearing surface
- Mounting hardware included
- Water shield included
- Tapped & Drilled Mounting Holes:
  - **Universal Evaporator Mount**
    - Standard 3-Hole
    - Custom 4-Hole Hussmann Style
  - **Universal Condenser Mount**
    - Double Boss

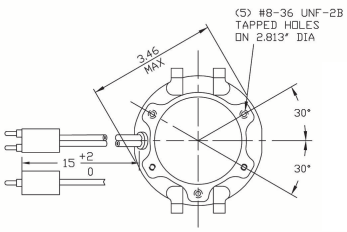

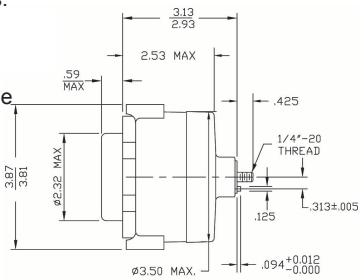

Specifications:

- 1550 RPM standard
- Cast iron
- Unit bearing
- EMF P-2-1A lyall power plug
- 15" Leads
- UL file no. E128044

MARS NO.	APPLICATIONS	OUTPUT WATTS	VOLTS	NOMINAL AMPS	ROT SE	RPM	MARS PACK
00621	Evaporator/ Condenser	6-12	115	0.25	CW	1550	1
00621BULK	Evaporator/ Condenser	6-12	115	0.25	CW	1550	6
00622	Evap/Cond, 90˚Lyall Plug	6-12	115	0.25	CW	1550	1
00624	Evaporator/ Condenser	14-16	115	0.50	CW	1550	1
00625	Evap/Cond, 90˚Lyall Plug	14-16	115	0.50	CW	1550	1